E-TON

PARTS CATALOGUE

SIERRA-U DXL-90U

CONTENTS

PARTS ITEM:

01 CYLINDERHEAD
02 CRANKSHAFTPISTON
03 FAN COVERAIR SHROUD
04 AIR CLEANERREED VALVECARBURETOR
05 CRANK CASECOVEROIL PUMP
06 TRANSMISSION
07 KICK SHAFT ASSY.STARTER CLUTCH ASSY.
08 DRIVEN PULLEY (CVT)
09 ENGINE BRACKET ENG ATV
10 GENERATORSTART MOTOR
11 PREARRANGE
12 PREARRANGE
13 MUFFLER
14 FRAME
15 SWING ARM
16 FENDER
17 SEAT
18 FUEL TANKOIL TANK
19 SUSPENSION
20 FRONT WHEEL
21 REAR WHEEL
22 FRONT BRAKE
23 REAR BRAKE
24 HANDLE BAR
25 BUMPERFOOTREST
26 CHAINREAR WHEEL AXLE
27 STEERING

28 ELECTRICAL EQUIPMENT
29 FRONT&REAR PACK ASSY
30 PACKING CASEEXTERNAL
40 CYLINDER+PISTON TOP END KIT
41 MAINTENANCE KIT 1 (MJ # 85)
42 MAINTENANCE KIT 2 (MJ # 85)

N & sign meaning: not available to sale

1. CYLINDER, HEAD

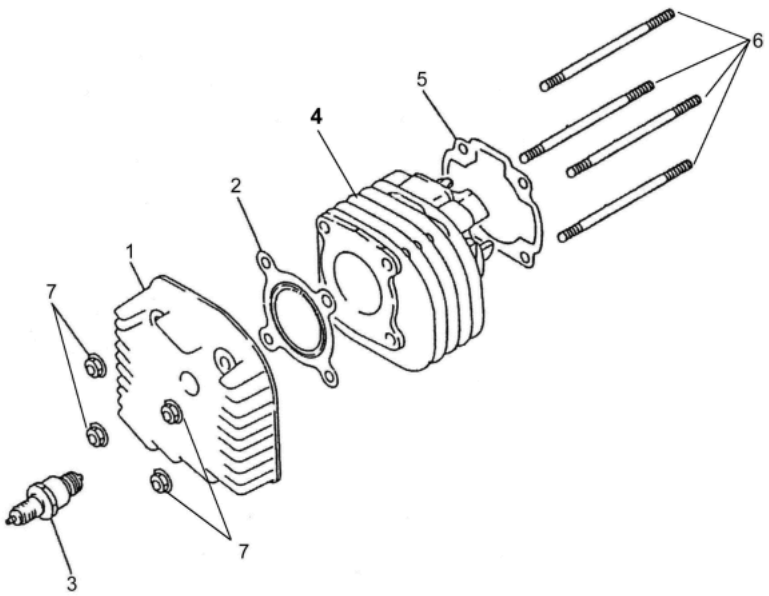

ITEM	AVAIL	PART NO.	NAME	QTY
01			CYLINDERHEAD	
01-1		A2200-B00-0000	HEAD CYLINDER	1
01-2		A2251-B00-0000	GASKET CYLINDER HEAD	1
01-3		I8000-B00-0000	SPARK PLUG	1
01-4		A2100-B00-0000	CYLINDER	1
01-5		A2191-B00-0000	GASKET CYLINDER	1
01-6		I0031-07124-0H	STUD BOLT (A)	4
01-7		I4050-07070-0H	NUT FLANGE	4

2. CRANKSHAFT, PISTON

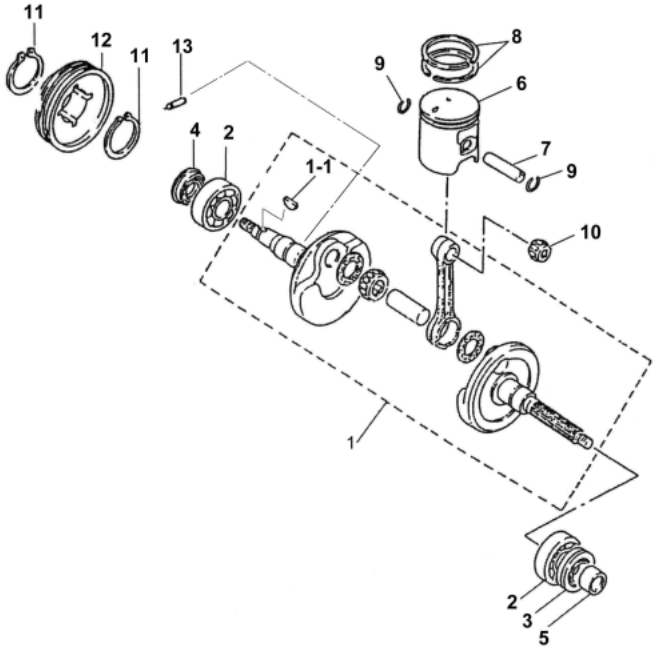

ITEM	AVAIL	PART NO.	NAME	QTY
02			CRANKSHAFTPISTON	
02-1		A3000-B00-0001	CRANKSHAFT COMP	1
02-1-1		I4401-13050	WOODRUFF KEY	1
02-2		I6100-62044-10	BEARING, BALL, RADIAL	2
02-3		I1202-B00-0000	OIL SEAL	1
02-4		I1201-B00-0000	OIL SEAL	1
02-5		B8117-B00-0000	BOSS	1
02-6		A3101-B00-0000	PISTON	1
02-7		A3111-B00-0000	PIN PISTON (12×40)	1
02-8		A3011-B00-0000	PISTON RING SET (50)	1
02-9		I4601-12000	CLIP, PISTON PIN	2
02-10		I1100-1215165	BEARING, NEEDLE	1
02-11		I4510-19000	CIRCLIP EX	2
02-12		A5131-B00-0000	GEAR PUMP DRIVE	1
02-13		I4303-03118	KNOCK PIN	1

3. FAN COVER, SHROUD

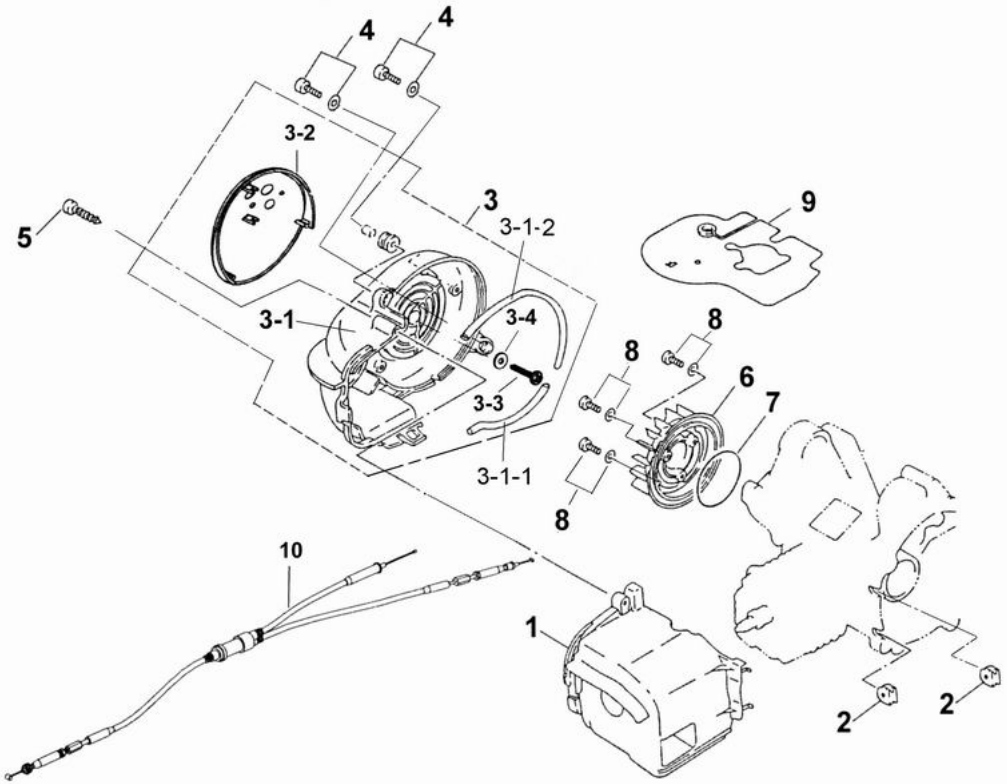

ITEM	AVAIL	PART NO.	NAME	QTY
03			FAN COVERAIR SHROUD	
03-1		A9620-B00-0001	AIR SHROUD, CYLINDER	1
03-2		A1207-B00-0000	GROMMET	2
03-3		A961A-B00-0000	COVER FAN COMP	1
03-3-1		A9610-B00-0000	COVER COMP FAN	1
03-3-1-1		A9617-B00-0000	SEAL SHROUD 1	1
03-3-1-2		A9618-B00-0000	SEAL SHROUD 2	1
03-3-2		A9616-B00-0000	CAP FAN COVER	1
03-3-3		I3903-416B0	TRUSS	1
03-3-4		I4104-05316	WASHER	1
03-4		I3891-06020-0C	SCREW WASHER	2
03-5		I3901-240C0	SCREW TAPPING	1
03-6		A9510-B00-0000	FAN	1
03-7		I4608-64431	O-RING	1
03-8		I3893-06016-0H	SCREW WASHER	3
03-9		H0153-B00-0000	DEFLECTOR	1
03-10		A7910-9FA0-0000	CABLE ASSY THROT	1

4. AIR CLEANER, REED VALVE, CARBURETOR

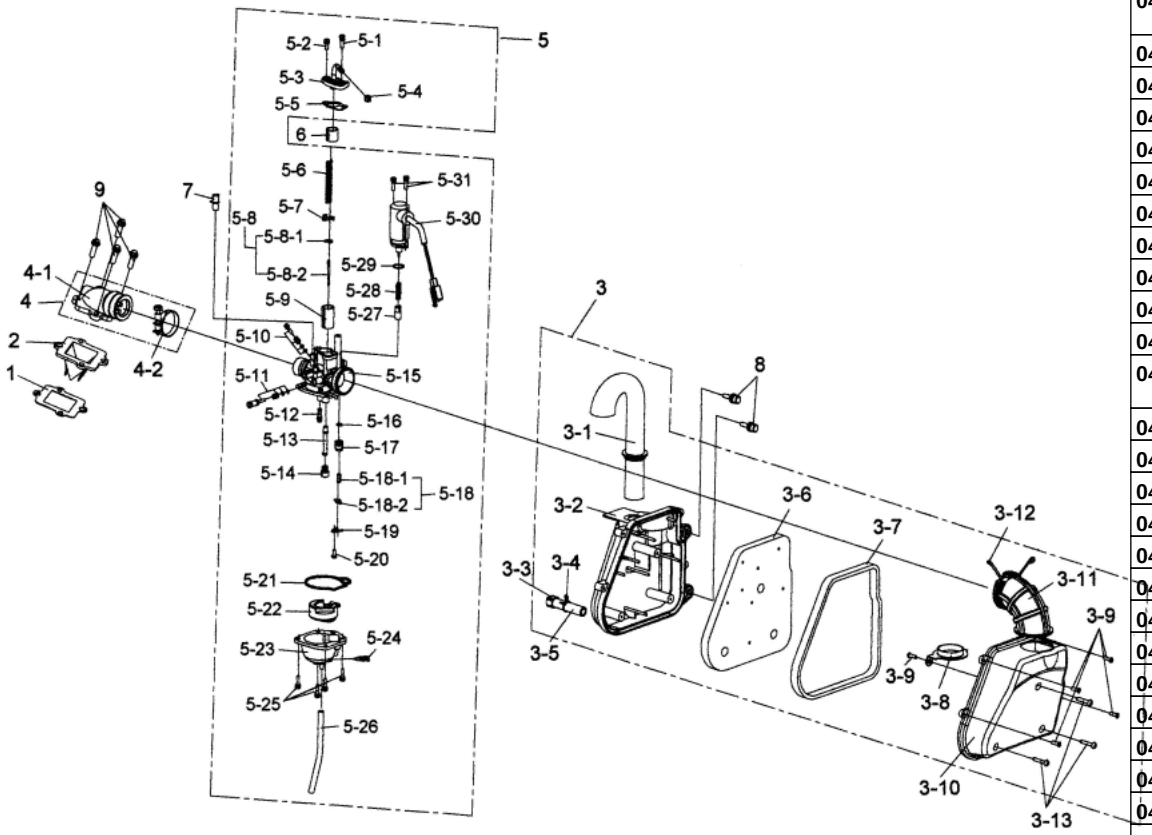

ITEM	AVAIL	PART NO.	NAME	QTY
04			AIR CLEANERREED VALVE CARBURETOR	
04-1		A6201-B00-0000	GASKET VALVE SEAT	1
04-2		A410A-B00-0000	REED VALVE ASSY	1
04-3		A720A-B00-7000	AIR CLEANER ASSY	1
04-3-1		A7257-B00-7000	DUCT	1
04-3-2		A7230-B00-0000	CASE AIR/C	1
04-3-3		A7232-B00-0000	CAP	1
04-3-4		I5002-12312	TUBE CLIP	1
04-3-5		A7234-B00-0000	TUBE DRAIN	1
04-3-6		A7205-B00-0000	WEB AIR/C	1
04-3-7		A7214-B00-0000	SEAL	1
04-3-8		A7233-B00-0000	PLATE FIXING CONNECTING TUBE	1
04-3-9		I3903-312B0	TRUSS	5
04-3-10		A7231-B00-0000	COVER AIR/C	1
04-3-11		A7253-B00-0000	JOIN PIPE AIR CLEANER	1
04-3-12		I5002-43022	TUBE CLIP	1
04-3-13		I3901-425C0	SCREW TAPPING	3
04-4		A711A-B00-0000	PIPE INLET ASSY	1
04-4-1		A7110-B00-0000	PIPE COMP INLET	1
04-4-2		A7256-B00-0000	BAND CONNECTING TUBE	1
04-5		A610A-B00-0001	CARBURETOR ASSY. (MJ #85)	1
04-5-1		A6111-B00-0000	BOLT WASHER	1
04-5-2		A6109-B00-0000	BOLT WASHER	1
04-5-3		A6102-B00-0000	CARBURETOR COVER	1
04-5-4		A6112-B00-0000	NUT HEX	1
04-5-5		A6103-B00-0000	CARBURETOR COVER WASHER	1
04-5-6		KAC31810	THROTTLE VALVE SPRING	1
04-5-7		KAC30310	V CLIP	1
04-5-8		KAC30220	JET NEEDLE ASSY. (#3CR1)	1
04-5-8-1	N	KAC30222	E CLIP	1
04-5-8-2	N	KAC30221	JET NEEDLE (#3CR1)	1
04-5-9		KAC30110	THROTTLE VALVE (#3.0)	1
04-5-10		A6105-B00-0000	AIR FLOW ADJUSTING SCREW	1
04-5-11		KAC30840	THROTTLE ADJUSTING SCREW	1
04-5-12		KAC30510	SLOW JET (*20)	1
04-5-13		KAC30610	NEEDLE JET (*426 E-1)	1
04-5-14		KAC30410	MAIN JET # 85	1
04-5-15		A6104-B00-0000	CARBURETOR BODY	1

04-5-16		A6118-B00-0000	O-RING	1
04-5-17	N	A6119-B00-0000	NEEDLE VALVE SEAT	1
04-5-18	N	KAC31120	NEEDLE VALVE ASSY.	1
04-5-18-1	N	KAC31121	NEEDLE VALVE	1
04-5-18-2	N	KAC31122	FLOAT CLIP	1
04-5-19		A6120-B00-0000	PLATE FIXING	1
04-5-20		A6115-B00-0000	BOLT	1
04-5-21		KAC30910	CHAMBER O-RING	1
04-5-22		KAC31210	FLOAT ASSY	1
04-5-23		A6108-B00-0000	CARBURETOR CHAMBER	1
04-5-24		KAC31410	DRAIN SCREW	1
04-5-25		A6117-B00-0000	BOLT WASHER	4
04-5-26		A6106-B00-0000	RUBBER TUBE	1
04-5-27		A6153-B00-0000	MANUAL CHOKE VALVE	1
04-5-28		A6152-B00-0000	SPRING	1
04-5-29		A6113-B00-0000	O-RING	1
04-5-30		KAC31910	AUTO-BY STARTER	1
04-5-31		A6114-B00-0000	BOLT WASHER	2
04-6		A6022-5EC9-0000	RESTRICTOR CARBURETOR	1
04-7		A6101-B02-0000	CRAB RUBBER CAP	1
04-8		I6706-06020-0C	SCREW WASHER	2
04-9		I6001-06020-0H	FLANGE BOLT, HEX.	4

5. CRANK CASE, COVER ,OIL PUMP

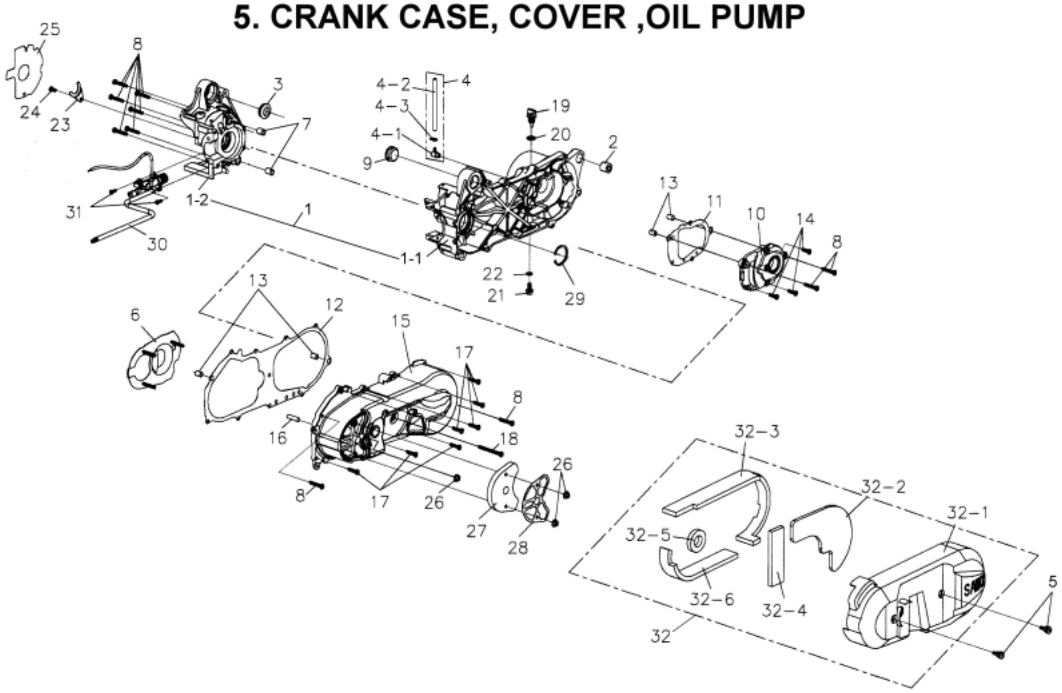

ITEM	AVAIL	PART NO.	NAME	QTY
05			CRANK CASECOVEROIL PUMP	
05-1		A1000-B00-0000	R L CRANK CASE COMP	1
05-1-1	N	A1200-B00-8900	CRANK CASE (L)	1
05-1-2	N	A1100-B00-9900	CRANK CASE RIGHT	1
05-2		A1208-B00-0000	BUSH	1
05-3		A1105-B00-0000	CAP RUBBER R	1
05-4		A1220-B00-0000	BREATHER COMP	1
05-4-1	N	A1206-B00-0000	BREATHER JOINT	1
05-4-2	N	A1221-B00-0000	HOSE, BREATHER	1
05-4-3		I5002-06008	TUBE CLIP	1
05-5		A137A-B00-0000	BOLT,FLANGE(M6×23.5)	2
05-6		A1361-B00-0000	PLATE	1
05-7		I4301-12160	KNOCK PIN	2
05-8		I3500-06035-0A	SCREW PAN	10
05-9		A1205-B00-0000	RUBBER CAP LEFT	1
05-10		B1300-B00-0000	COVER, MISSION	1
05-11		B1395-B00-0000	GASKET, MISSION COVER	1
05-12		A1395-B00-0000	GASKET L COVER	1
05-13		I4301-10140	KNOCK PIN	4
05-14		I3500-06020-0A	SCREW PAN	3
05-15		A1341-B00-0000	COVER CRANK CASE L	1
05-16		A1342-B00-0000	SHAFT	1
05-17		I3500-06025-0A	SCREW PAN	8
05-18		I3500-06065-0A	SCREW PAN	1
05-19		A5651-B00-0000	PLUG, OIL	1
05-20		I4608-13825	O-RING	1
05-21		I5701-08016-0H	BOLT FLANGE	1
05-22		I4104-08015	WASHER	1
05-23		A1121-B00-0000	HOLDER	1
05-24		I3500-06012-0A	SCREW PAN	1
05-25		A1393-B00-0000	GASKET R CRANK CASE	1
05-26		I4050-06060-0H	NUT FLANGE	3
05-27		A1362-B00-0000	ELEMENT	1
05-28		A1363-B00-0000	GUIDE, ELEMENT	1
05-29		I4520-42000	CIRCLIP IN	1
05-30		A510A-B00-7000	OIL PUMP ASSY	1
05-31		I3500-05014-0A	SCREW PAN HEAD	2
05-32		A135A-B00-0000	COVER, CRANKCASE ASSY(L)	1
05-32-1		A1351-B00-0000	COVER, CRANKCASE (L)	1

05-32-2		A1352-B00-0000	DAMPER ENGINE MOUT 1	1
05-32-3		A1354-B00-0000	DAMPER ENGINE MOUT 3	1
05-32-4		A1353-B00-0000	DAMPER ENGINE MOUT 2	1
05-32-5		A1356-B00-0000	DAMPER ENGINE MOUT 5	1
05-32-6		A1355-B00-0000	DAMPER ENGINE MOUT 4	1

6.TRANSMISSION

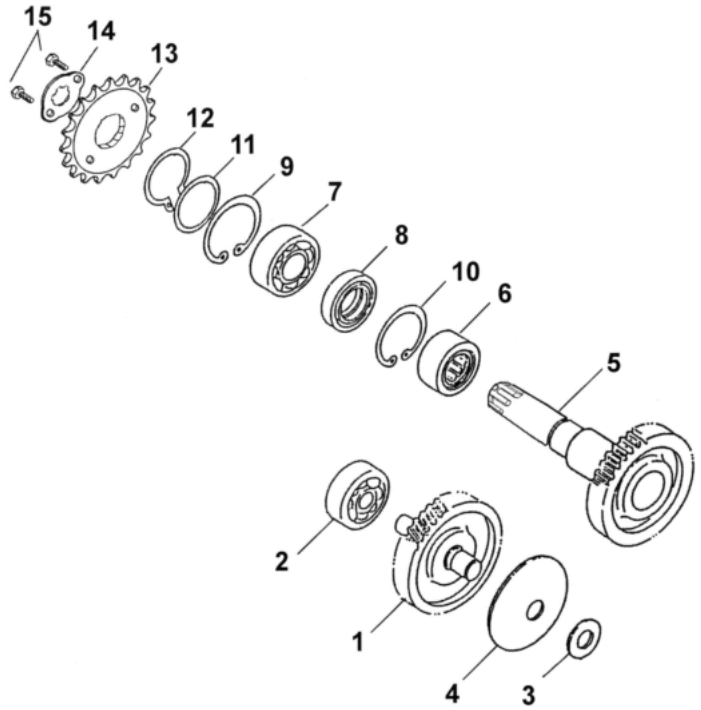

ITEM	AVAIL	PART NO.	NAME	QTY
06			TRANSMISSION	
06-1		B3420-B00-0000	COUNTER SHAFT COMP	1
06-2		I6100-62013-10	BEARING, BALL, RADIAL	1
06-3		I4104-12310	WASHER	1
06-4		I700W-12027	SPOKE NIPPLE WASHER	1
06-5		B3430-B00-9000	FINAL SHAFT COMP	1
06-6		I1130-253316	BEARING, NEEDLE	1
06-7		I6150-60040-10	BEARING, BALL, RADIAL	1
06-8		I1204-B00-0000	OIL SEAL	1
06-9		I4520-42000	CIRCLIP IN	1
06-10		I4530-32000	CIRCLIP	1
06-11		I4104-20210	WASHER	1
06-12		I4510-20000	CIRCLIP EX	1
06-13		B3801-B00-9000	DRIVE CHAIN SPROCKET	1
06-14		B3811-A00-0000	PLATE FIXING	1
06-15		I2201-06010-0H	BOLT	2

7.KICK SHAFT ASSY., STARTER CLUTCH ASSY.

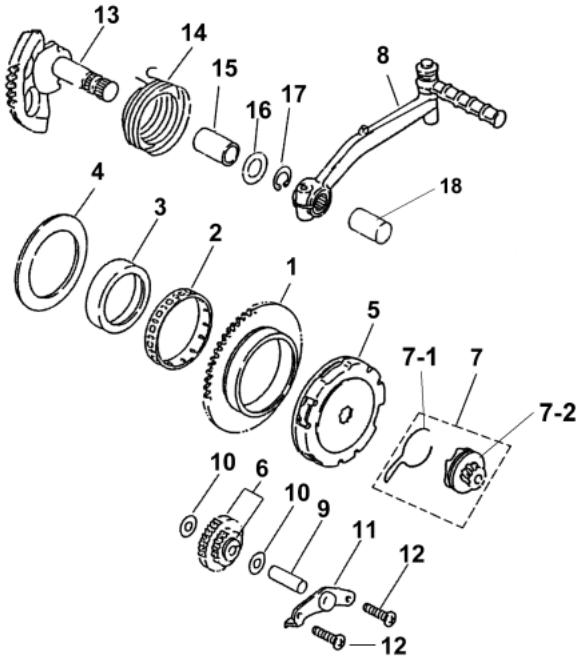

ITEM	AVAIL	PART NO.	NAME	QTY
07			KICK SHAFT ASSY.STARTER CLUTCH ASSY.	
07-1		B8110-B00-0000	GEAR COMP STARTING CLUTCH	1
07-2		I1100-555913	BRARING, NEEDLE	1
07-3		B8115-B00-0000	BOSS GEAR	1
07-4		I4104-55506	WASHER	1
07-5		B8120-B00-0000	OUTER COMP ST CLUTCH	1
07-6		B8100-B00-0000	GEAR COMP STARTER REDUCTION	1
07-6-1		B8101-B00-0000	GEAR STARTER REDUCTION	1
07-6-2		I1130-081210	BEARING, NEEDLE	1
07-7		B823A-B00-0000	GEAR ASSY STARTER IDLE	1
07-7-1		B8223-B00-0000	SPG KICK DRIVEN GEAR	1
07-7-2		B8230-B00-0000	GEAR COMP KICK DRIVEN	1
07-8		B8300-B00-8000	KICK CRANK ASSY.	1
07-9		B8102-B00-0000	SHAFT START REDUCTION	1
07-10		I4104-08218	WASHER	2
07-11		B8105-B00-0000	PLATE START REDUCTION	1
07-12		I3892-06014-0H	SCREW WASHER	2
07-13		B8250-B00-9000	SPINDLE COMP KICK START	1
07-14		B8281-B00-0000	SPRING KICK RETURN	1
07-15		B8254-B00-0000	BOSS KICK SPINDLE	1
07-16		I4104-15010	WASHER	1
07-17		I4510-15000	CIRCLIP EX	1
07-18		A1000-5EA0-0000	RUBBER CAP KICK SHAFT	1

8.DRIVEN PULLEY(CVT)

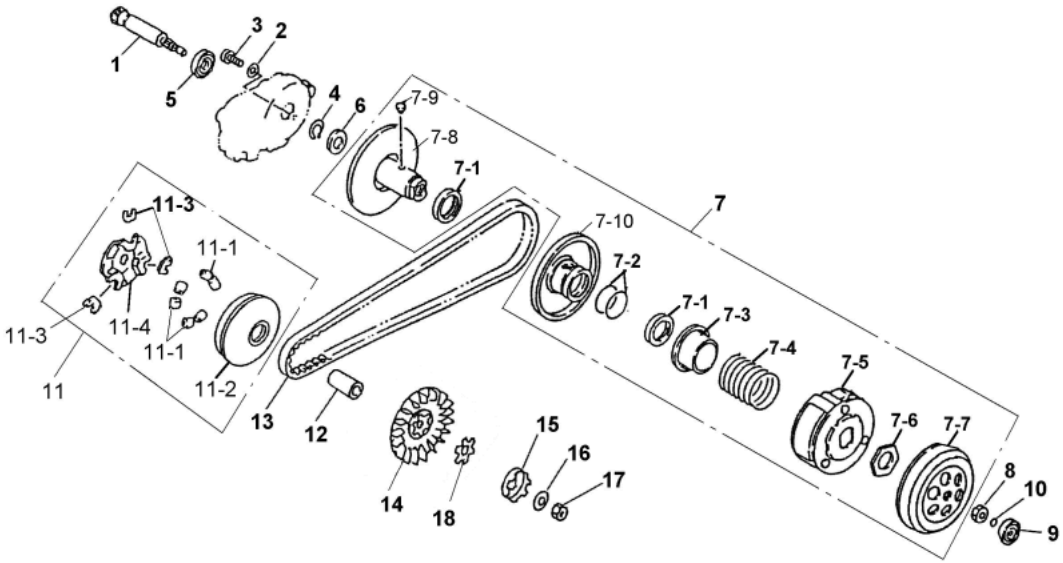

ITEM	AVAIL	PART NO.	NAME	QTY
08			DRIVEN PULLEY (CVT)	
08-1		B3411-B00-0000	SHAFT DRIVE	1
08-2		I4104-06512A	WASHER	1
08-3		I3500-06010-0A	SCREW PAN	1
08-4		I4510-17000	CIRCLIP EX	1
08-5		I6100-60030	BEARING, BALL, RADIAL	1
08-6		I1203-B00-0000	OIL SEAL	1
08-7		B301A-B00-0000	PLATE SUB ASSY DRIVE	1
08-7-1		I1211-B00-0000	OIL SEAL	2
08-7-1		I1211-B00-0000	OIL SEAL	2
08-7-2		I4608-36719	O-RING	2
08-7-2		I4608-36719	O-RING	2
08-7-3		B3237-B00-0000	COLLAR SEAL	1
08-7-3		B3237-B00-0000	COLLAR SEAL	1
08-7-4		B3233-B02-0000	SPG DRIVEN FACE	1
08-7-4		B3233-B00-0000	SPG DRIVEN FACE	1
08-7-5		B2300-B00-0000	PLATE COMP DRIVE	1
08-7-5		B2300-B00-0000	PLATE COMP DRIVE	1
08-7-6		I4002-281A0	NUT HEX	1
08-7-6		I4002-281A0	NUT HEX	1
08-7-7		B2101-B00-0000	OUTER CLUTCH	1
08-7-7		B2101-B00-0000	OUTER CLUTCH	1
08-7-8		B3210-B00-0000	FACE COMP DRIVEN	1
08-7-8		B3210-B00-0000	FACE COMP DRIVEN	1
08-7-9		B3220-B00-0000	FACE COMP MOVABLE DRIVE	1
08-7-9		B3225-B00-0000	PIN GUIDE	2
08-7-10		B3225-B00-0000	PIN GUIDE	2
08-7-10		B3220-B00-0000	FACE COMP MOVABLE DRIVE	1
08-8		I4050-10080-0H	NUT FLANGE	1
08-9		I6130-60380-10	BEARING, BALL, RADIAL	1
08-10		I4608-64531	O-RING	1
08-11		B211A-B00-0000	FACE ASSY MOVABLE DRIVE	1
08-11-1		B2121-B00-0000	ROLLER COMP WEIGHT	6
08-11-2		B2110-B00-0000	FACE COMP MOVABLE DRIVE	1
08-11-3		B2132-B00-0000	PIECE SLIDE	3
08-11-4		B2131-B00-0000	PLATE RAMP	1
08-12		B2105-B00-0000	BOSS DRIVE FACE	1
08-13		B3100-B00-0000	BELT DRIVE	1
08-14		B2102-B00-0000	FACE DRIVE	1

08-15		B8211-B00-0000	CLUTCH, ONEWAY	1
08-16		I700W-10126	SPOKE NIPPLE WASHER	1
08-17		I4001-100C0	NUT HEX	1
08-18		B2103-B00-0000	WASHER DRIVE FACE	1

9.ENGINE BRACKET

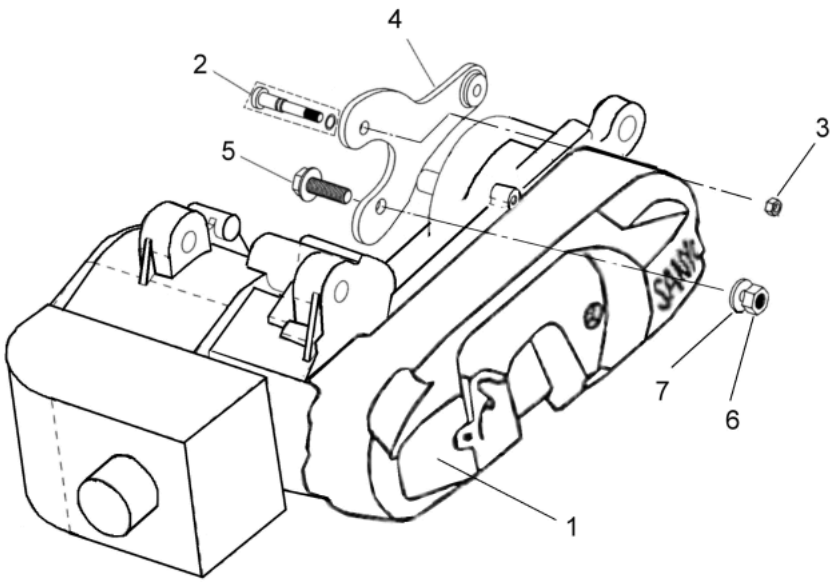

ITEM	AVAIL	PART NO.	NAME	QTY
09			ENGINE BRACKET ENG ATV	
09-1		AB000-B00-8003	ENGINE ATV	1
09-2		A1261-B00-9000	PIN, PIVOT	1
09-3		I0309-0800H	HEX. NUT, SAFETY	1
09-4		A1241-B00-9000	ENGINE BRACKET	1
09-5		I5702-12038-0H	BOLT FLANGE	1
09-6		I4001-121H0	NUT HEX	1
09-7		I4104-12210	WASHER	1

10.GENERATOR, START MOTOR

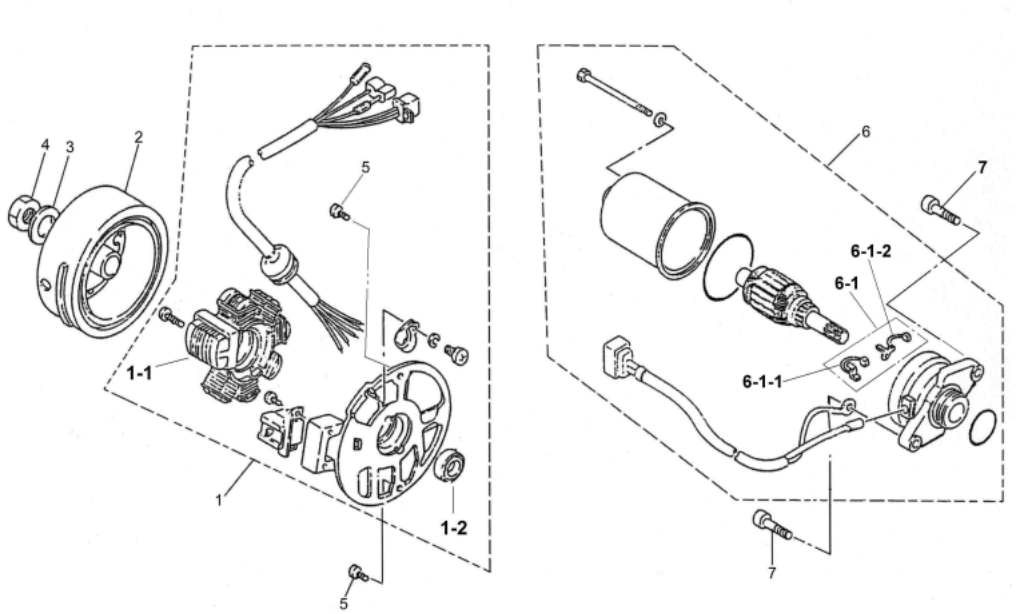

ITEM	AVAIL	PART NO.	NAME	QTY
10			GENERATORSTART MOTOR	
10-1		C1120-B00-0000	STATOR COMP	1
10-1-1	N	C1121-B00-0000	STATOR	1
10-1-2	N	I1205-B00-0000	OIL SEAL	1
10-2		C1110-B00-0000	FLYWHEEL COMP.	1
10-3		I4104-12522	WASHER	1
10-4		I4050-12110-0H	NUT FLANGE	1
10-5		I3500-06016-0A	SCREW PAN	2
10-6		C1200-B00-0000	MOTOR START COMP	1
10-6-1		C1220-B00-0000	CARBON BRUSH COMP	1
10-6-1-1	N	C1221-B00-0000	POSITIVE CARBON BRUSH	1
10-6-1-2	N	C1222-B00-0000	NEGATIVE CARBON BRUSH	1
10-7		I6001-06020-0H	FLANGE BOLT, HEX.	2

No picture.

ITEM	AVAIL	PART NO.	NAME	QTY
11			PREARRANGE	

No picture.

ITEM	AVAIL	PART NO.	NAME	QTY
12			PREARRANGE	

13. MUFFLER

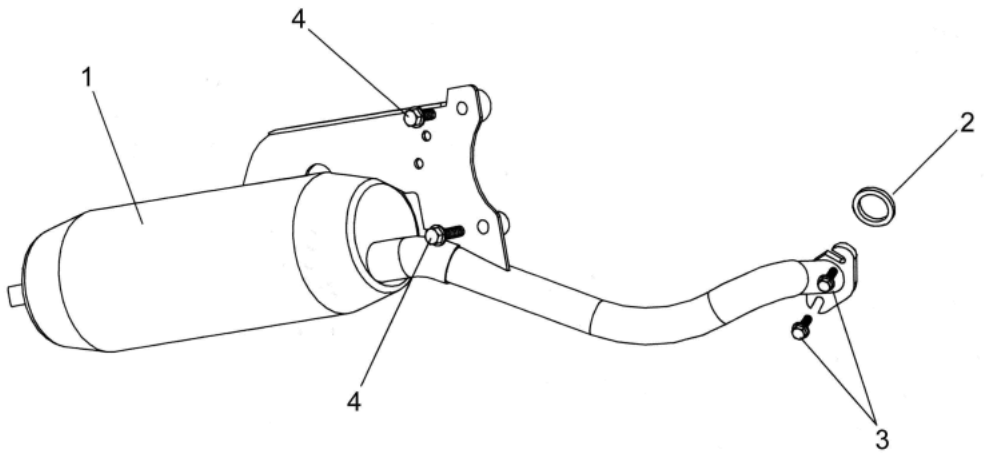

ITEM	AVAIL	PART NO.	NAME	QTY
13			MUFFLER	
13-1		A830A-9FA0-0000	EXHAUST PIPE ASSY.	1
13-2		A8291-5AA0-0000	GASKET (34×25.4×4)	1
13-3		I0149-06810	BOLT ,FLANGE	2
13-4		I0149-08036-01	BOLT,FLANGE	2

14. FRAME

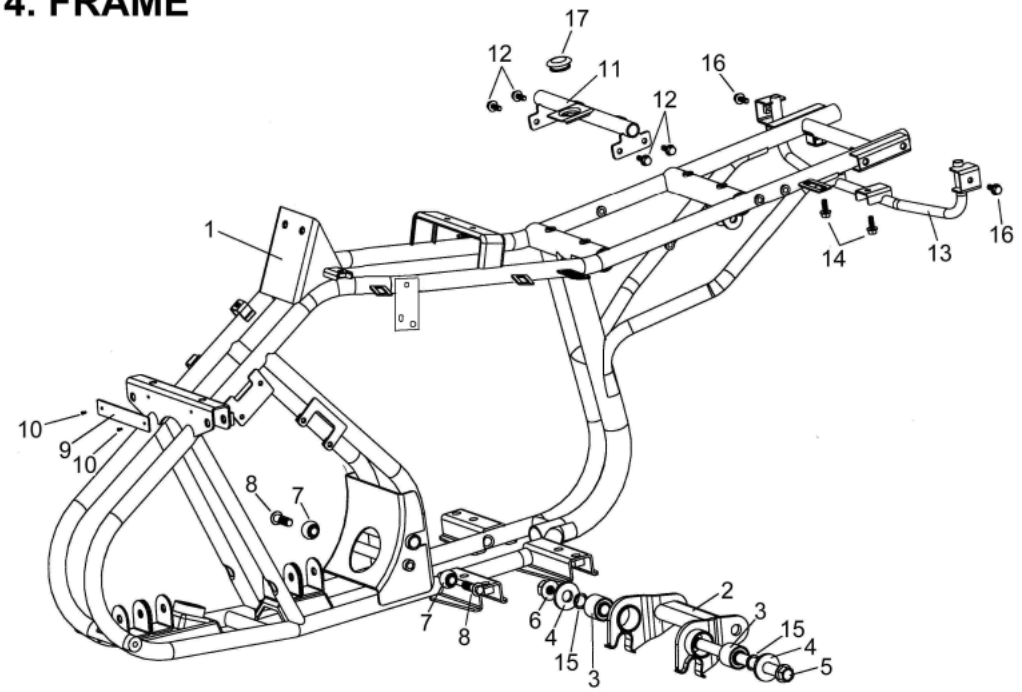

ITEM	AVAIL	PART NO.	NAME	QTY
14			FRAME	
14-1		E0100-9FA0-0000	FRAME COMP.	1
14-2		E0350-9FA0-0000	ENGINE SUSPENSION ASSY.	1
14-3		E2202-9FA0-0000	BUSH	2
14-4		E0111-9FA0-0000	WASHER	2
14-5		E0351-9FA0-0000	ENGINE SET BOLT(M14×230)	1
14-6		I5611-14200	HEX. FLANGE NUT, SAFETY	1
14-7		E0353-9FA0-0000	RUBBER, ENGINE SUSPENSION	2
14-8		I0149-10030	BOLT,FLANGE	2
14-9	N	E0101-5EA0-0000	FRAME NUMBER PLATE	1
14-10		H750A-5BA1-0000	NAIL, PULL	2
14-11		E0105-9FA0-0000	BRACKET, SEAT	1
14-12		I0149-06016	BOLT FLANGE	4
14-13		E0110-9FA0-0000	SUPPORT BAR, TAIL LIGHT	1
14-14		I0149-06010	BOLT,FLANGE	2
14-15		E0112-9FA0-0000	WASHER	2
14-16		I0119-06802	BOLT+WASHER	2
14-17		E0113-9FA0-0000	RUBBER, SEAT	1

15. SWINGARM

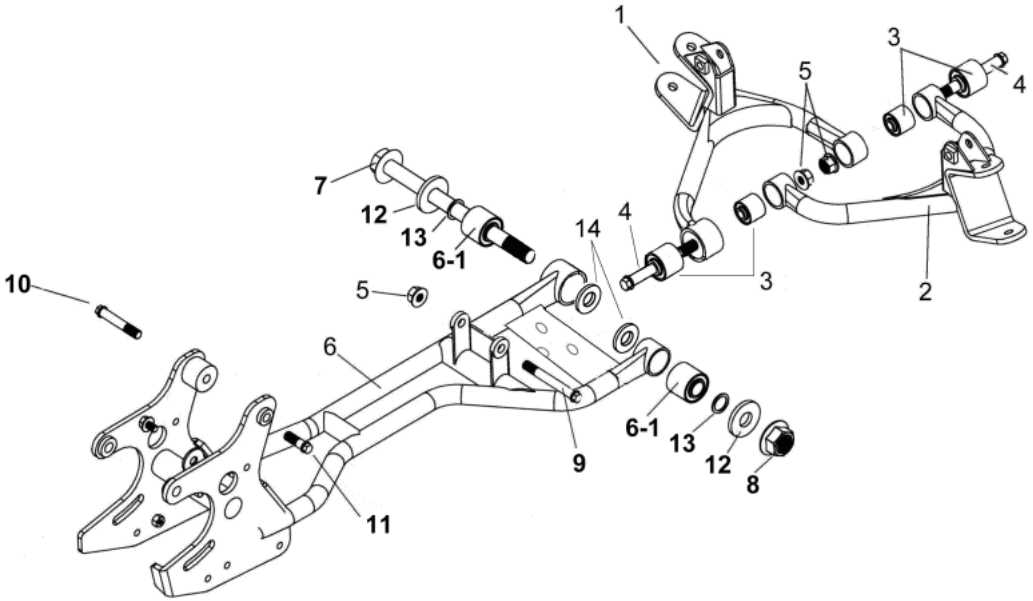

ITEM	AVAIL	PART NO.	NAME	QTY
15			SWING ARM	
15-1		E0200-9FA0-0000	ARM, SUSPENSION, L.H.	1
15-2		E0210-9FA0-0000	ARM, SUSPENSION, R.H.	1
15-3		E0201-9FA0-0000	BUSH, ARM SUSPENSION	4
15-4		I0149-10080	BOLT,FLANGE	2
15-5		I5611-10200	FLANGE NUT CHECK	3
15-6		E220A-9FA0-0010	SWING ARM SUB ASSY.	1
15-6-1		E2202-9FA0-0000	BUSH	2
15-7		E0351-9FA0-0000	ENGINE SET BOLT(M14×230)	1
15-8		I5611-14200	HEX. FLANGE NUT, SAFETY	1
15-9		I0149-10085	BOLT,FLANGE	1
15-10		I0149-10060	BOLT,FLANGE	1
15-11		I0149-10030	BOLT,FLANGE	1
15-12		E0111-9FA0-0000	WASHER	2
15-13		E0112-9FA0-0000	WASHER	2
15-14		I3003-14028	WASHER(14.5×28.5×3t)	2

16 FENDER

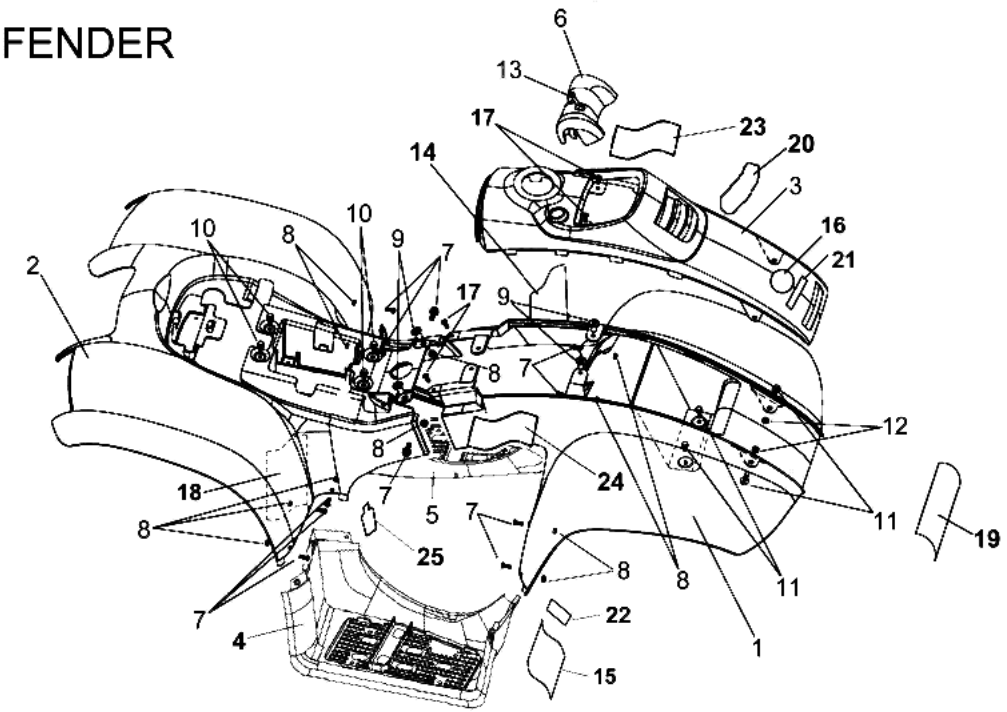

ITEM	AVAIL	PART NO.	NAME	QTY
16			FENDER	
16-1		F4300-9FA0-0700	FRONT FENDER(SILVER)	1
16-1		F4300-9FA0-0100	FRONT FENDER(YELLOW)	1
16-1		F4300-9FA0-1500	FRONT FENDER(GREEN)	1
16-2		H3500-9FA0-0100	REAR FENDER(YELLOW)	1
16-2		H3500-9FA0-1500	REAR FENDER(GREEN)	1
16-2		H3500-9FA0-0700	REAR FENDER(SILVER)	1
16-3		F4301-9FA0-0800	FRONT CENTRAL COVER (BLACK)	1
16-3		F4301-9FA0-0200	FRONT CENTRAL COVER(RED)	1
16-3		F4301-9FA0-0900	FRONT CENTRAL COVER (BROWN)	1
16-4		H3520-9FA0-1000	FOOTREST, PLACTIC PART, RIGHT	1
16-5		H3620-9FA0-1000	FOOTREST, PLACTIC PART, LEFT	1
16-6		E3205-9FA0-0200	COVER, HANDLE BAR(RED)#1795C	1
16-6		E3205-9FA0-0800	COVER, HANDLE BAR(BLACK)	1
16-6		E3205-9FA0-0900	COVER, HANDLE BAR(BROWN)	1
16-7		E0117-9EA0-0000	SCREW, TRUSS	11
16-8		I5611-06200-0G	HEX. FLANGE NUT, SAFETY	11
16-9		F4312-9FA0-0000	NUT, PLACTIC	4
16-10		I0109-5BA1-0000	BOLT FLANGE	4
16-11		I7507-08020	BOLT,HEXAGON HEAD(M8×20)	4
16-12		I5611-08200	NUT,FLANGE	2
16-13		I0050-06010	BOLT, SOCKET	1
16-14		H7101-9FA0-9000	STICKER,WARNING PASSENGER	1
16-15		H7102-9FA0-9000	STICKER,WARNING (Y12)	1
16-16		H7107-5EB0-0000	EMBLEM, E-TON LOGO(SILVER)	1
16-17		I8310-06025	SCREW(M6×25)	4
16-18		F4315-9FA0-0000	ISOLATE FOAM	1
16-19		F4309-5EA0-0000	STICKER, MFD.	1
16-20		H7110-9FA0-0900	STICKER,CENTRAL COVER (SIERRA)(BROWN)	1
16-20		H7110-9FA0-0700	STICKER,CENTRAL COVER (SIERRA)(SILVER)	1
16-20		H7110-9FA0-0200	STICKER,CENTRAL COVER (SIERRA)(RED)	1
16-21		H7108-5EB0-0000	STICKER, E-TON	1
16-22		H7102-5EA1-0000	STICKER,CE	1

16-23		H7103-9FA0-0000	STICKER, EMBLEM,DXL-90(LIFT)	1
16-24		H7104-9FA0-0000	STICKER,DXL-90(RIGHT)	1
16-25		H7101-5EA1-0000	STICKER WARNING,CE	1

17. SEAT

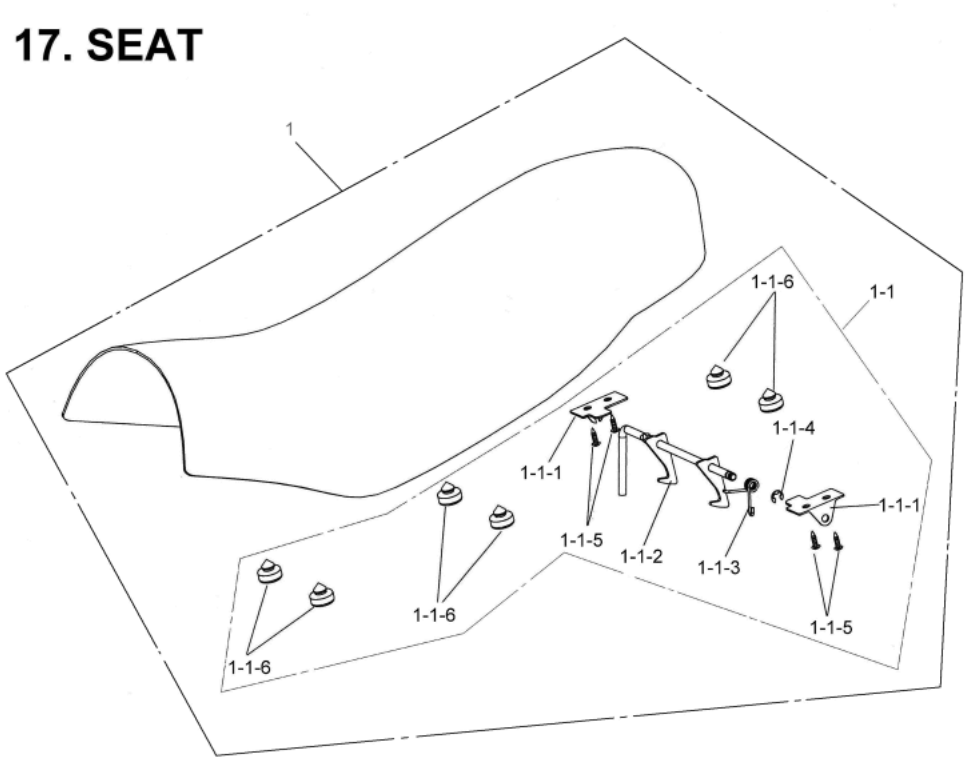

ITEM	AVAIL	PART NO.	NAME	QTY
17			SEAT	
17-1		G7200-9FA0-0200	SEAT ASSY. (RED)	1
17-1		G7200-9FA0-0800	SEAT ASSY. (BLACK)	1
17-1		G7200-9FA0-0900	SEAT ASSY. (BROWN)	1
17-1-1		G7201-9FA0-0000	SEAT FIXER ASSY.	1
17-1-1-1		G7221-9FA0-0000	SEAT FIXER	2
17-1-1-2		G7226-9FA0-0000	LEVEL ASSY.	1
17-1-1-3		G7227-9FA0-0000	LEVEL SPRING	1
17-1-1-4		G7230-9FA0-0000	E CLIP	1
17-1-1-5		G7231-9FA0-0000	SELF-TAPPING SCREW(M4×16)	4
17-1-1-6		G7232-9FA0-0000	PLUG RUBBER	6

18. FUEL TANK, OIL TANK

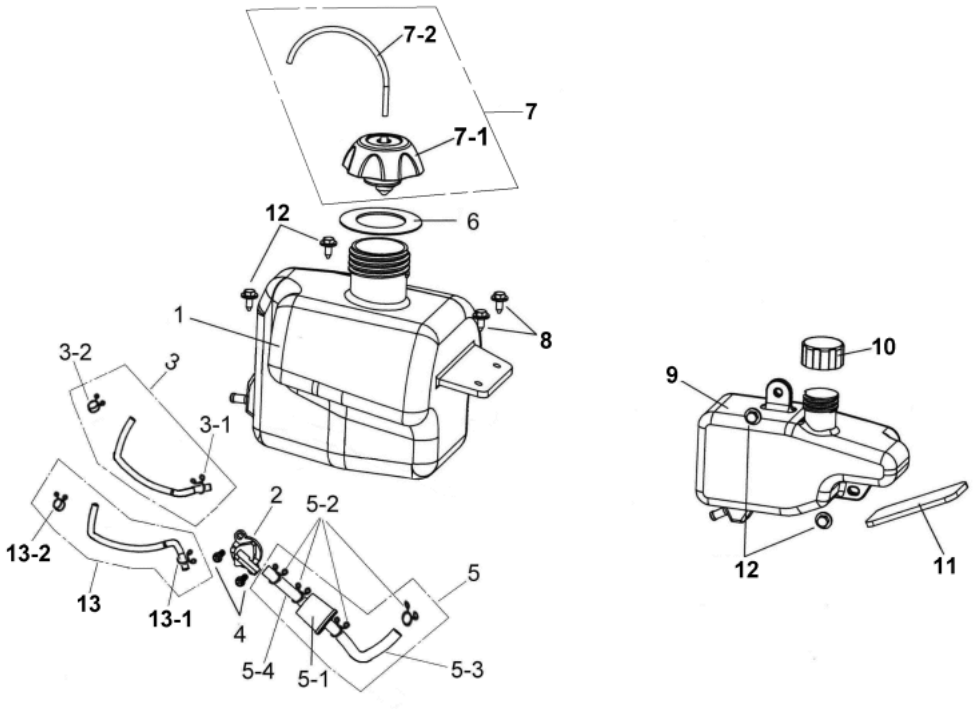

ITEM	AVAIL	PART NO.	NAME	QTY
18			FUEL TANKOIL TANK	
18-1		A7500-9FA0-0000	FUEL TANK ASSY.	1
18-2		A7520-5EA0-0000	MANUAL FUEL CUP	1
18-3		A7501-9FA0-0000	FUEL TUBE	1
18-3-1		A7516-5EA0-0000	CLIP(A)	1
18-3-2		A7517-5EA0-0000	CLIP(B)	1
18-4		I8506-05016	SCREW PAN	2
18-5		A7510-9FA0-1000	FUEL FILTER ASSY.	1
18-5-1		A7519-FIA0-1000	FUEL FILTER	1
18-5-2		A7516-5EA0-0000	CLIP(A)	4
18-5-3		A7514-9FA0-0000	FUEL TUBE (A)	1
18-5-4		A7515-9FA0-0000	FUEL TUBE (B)	1
18-6		A7622-9FA0-0000	RUBBER PAD, FUEL TANK CAP	1
18-7		A762A-9FA0-0000	FUEL TANK CAP ASSY.	1
18-7-1		A7620-9FA0-0000	FUEL TANK CAP	1
18-7-1		A7620-9FA0-0000	FUEL TANK CAP	1
18-7-2		A7621-9FA0-0000	TUBE, RUBBER	1
18-7-2		A7621-9FA0-0000	TUBE, RUBBER	1
18-8		I7507-06225	BOLT, HEX.	2
18-9		E5100-9FA0-0000	OIL TANK ASSY.	1
18-10		E5105-9FA0-0000	OIL TANK CAP ASSY.	1
18-11		E5108-9FA0-0000	RUBBER PAD	1
18-12		I0119-06821	BOLT, HEX.	4
18-13		A7502-9FA0-0000	SPARE TUBE	1
18-13-1		A7516-5EA0-0000	CLIP(A)	1
18-13-2		A7517-5EA0-0000	CLIP(B)	1

19. SUSPENSION

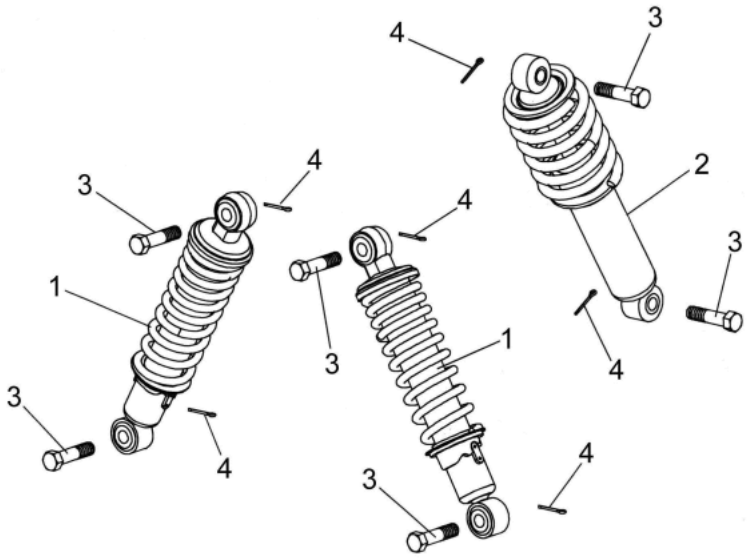

ITEM	AVAIL	PART NO.	NAME	QTY
19			SUSPENSION	
19-1		E1105-9FA0-0000	SUSPENSION, FRONT	2
19-2		E2400-9FA0-0000	SUSPENSION, REAR	1
19-3		I0102-10040B	BOLT HOLE	6
19-4		I9900-25019	PIN, SPLIT	6

20. FRONT WHEEL

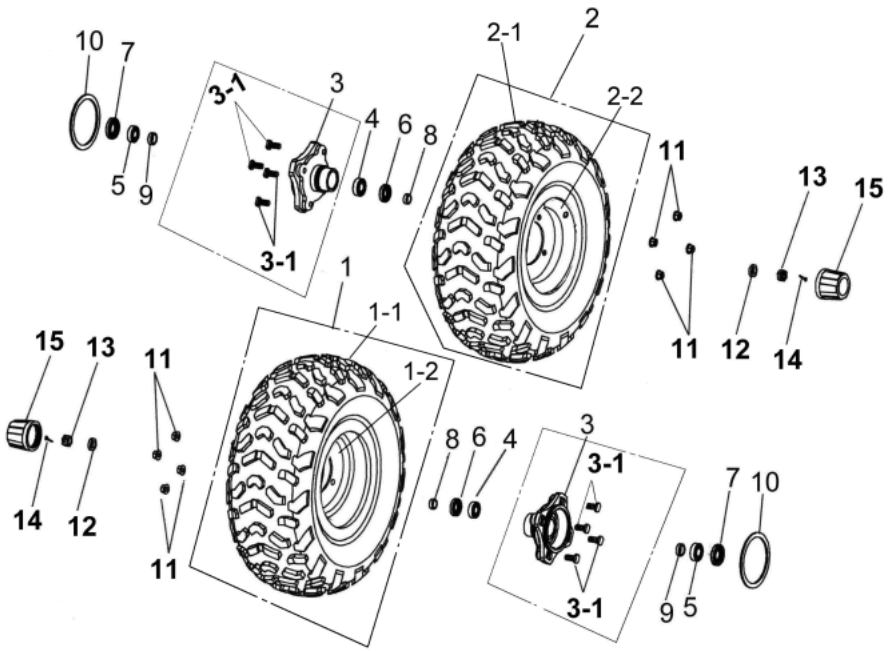

ITEM	AVAIL	PART NO.	NAME	QTY
20			FRONT WHEEL	
20-1		D471A-9FA0-0000	FRONT WHEEL ASSY.,LEFT	1
20-1-1		D4710-5EB0-0000	WHEEL TIRE(19×7-8)	1
20-1-2		D4602-5EB0-0000	WHEEL RIM	0
20-2		D471B-9FA0-0000	FRONT WHEEL ASSY.,RIGHT	1
20-2-1		D4710-5EB0-0000	WHEEL TIRE(19×7-8)	1
20-2-2		D4602-5EB0-0000	WHEEL RIM	0
20-3		D4610-9FA0-0000	BRAKE DRUM, FRONT	2
20-3-1		D4612-9FA0-0000	BOLT,STUD	8
20-4		I6100-6202Z	OUTER BEARING(15×35×11)	2
20-5		I6100-6203Z	INNER BEARING(17×40×12)	2
20-6		D4624-9FA0-0000	OUTER OIL SEAL(20×35×7)	2
20-7		D4623-9FA0-0000	INNER OIL SEAL(22×40×7)	2
20-8		D4621-9FA0-0000	OUTER SPACER (15.5×20×8)	2
20-9		D4620-9FA0-0000	INNER SPACER(17×24×8)	2
20-10		D4611-9FA0-0000	GASKET, ANTIDUST	2
20-11		D4611-9EA0-0000	NUT, FLANGE CHECK(M10)	8
20-12		I9905-14200	WASHER	2
20-13		I5500-14100	CASTLE NUT	2
20-14		I9900-30032	COTTER PIN(1/8"×11/4")	2
20-15		D4609-9FA0-0000	RUBBER CAP	2

21. REAR WHEEL

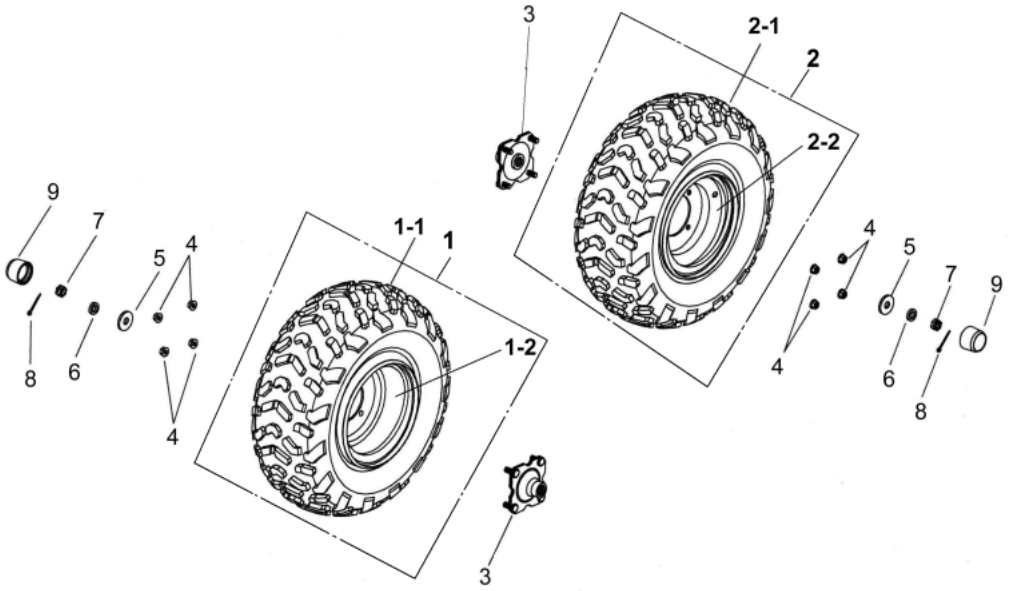

ITEM	AVAIL	PART NO.	NAME	QTY
21			REAR WHEEL	
21-1		D471A-9EA0-0000	REAR WHELL ASSY.,LEFT	1
21-1-1		D4710-5EB0-0000	WHEEL TIRE(19×7-8)	1
21-1-2	N	D4601-5EB0-0000	WHEEL RIM	1
21-2		D471B-9EA0-0000	WHEEL TIRE ASSY(RIGHT)	1
21-2-1		D4710-5EB0-0000	WHEEL TIRE(19×7-8)	1
21-2-2	N	D4601-5EB0-0000	WHEEL RIM	1
21-3		D2705-9EA0-1000	SHAFT CONNECTER WITH BOLTS	2
21-4		D4611-9EA0-0000	NUT, FLANGE CHECK(M10)	8
21-5		D2309-5EA0-0000	WASHER	2
21-6		I9905-14200	WASHER	2
21-7		I5500-14100	CASTLE NUT	2
21-8		I9900-30032	COTTER PIN(1/8"×11/4")	2
21-9		D4609-5EA0-0001	RUBBER CAP	2

22. FRONT BRAKE

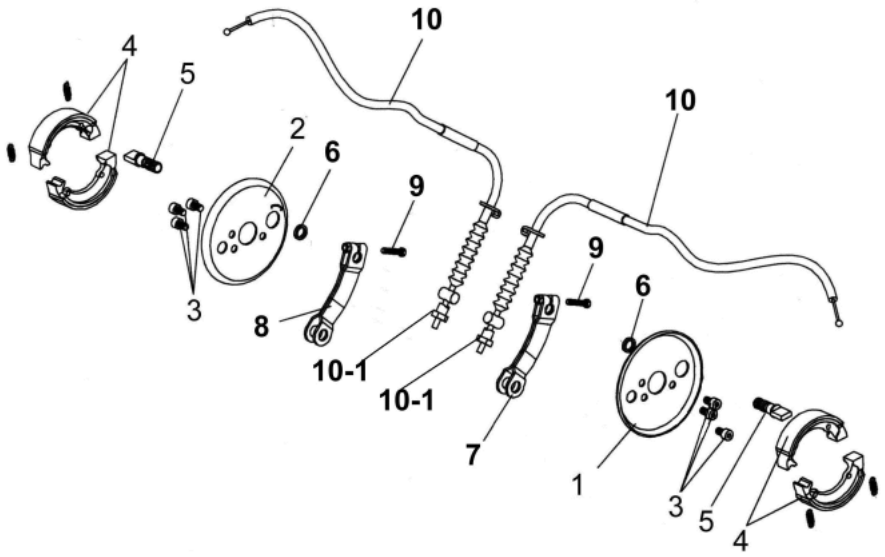

ITEM	AVAIL	PART NO.	NAME	QTY
22			FRONT BRAKE	
22-1		D5351-9FA0-0000	FRONT BRAKE PANEL COMP., LEFT	1
22-2		D5352-9FA0-0000	FRONT BRAKE PANEL COMP., RIGHT	1
22-3		I0050-06010	BOLT, SOCKET	6
22-4		D5120-9FA0-0000	FRONT BRAKE SHOE COMP. (80)	2
22-5		D5141-FIA0-0000	FRONT BRAKE ARM CAM	2
22-6		D5149-5EA0-0000	FELT SEAL	2
22-7		D5410-9FA0-0000	FRONT BRAKE ARM, LEFT	1
22-8		D5411-9FA0-0000	FRONT BRAKE ARM,RIGHT	1
22-9		I0020-05024	BOLT HEX.	2
22-10		E5450-9FA0-0000	CABLE, FRONT BRAKE	2
22-10-1		E5452-9FA0-0000	NUT,ADJUSTING	2

23 REAR BRAKE

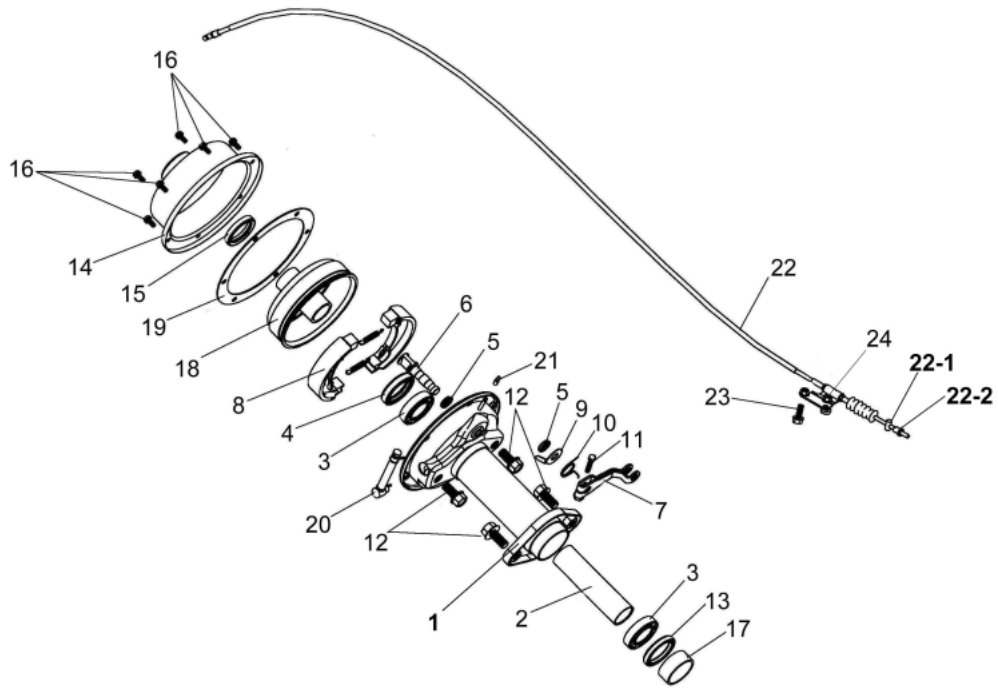

ITEM	AVAIL	PART NO.	NAME	QTY
23			REAR BRAKE	
23-1		D2310-5EA0-0000	BEARING SEAT ASSY., REAR WHEEL AXLE	1
23-2		D2311-5EA0-0000	SPACER	1
23-3		I6100-6006ZZ	BEARING, BALL RADIAL	2
23-4		D2315-9EA0-0000	OIL SEAL(38×55×10)	1
23-5		D2314-5EA0-0000	OIL SEAL(14×20×4)	2
23-6		D3141-5EA0-0000	BRAKE ARM CAM, REAR	1
23-7		D3410-5EA0-0000	BRAKE ARM, REAR	1
23-8		D3120-5EA0-0000	REAR BRAKE SHOE COMP.(130)	1
23-9		D3145-5EA0-0000	REAR BRAKE INDICATOR	1
23-10		D3419-5EA0-0000	REAR RETURN SPRING	1
23-11		I0020-06030	BOLT	1
23-12		I0141-12025-01	FLANGE BOLT, HEX.	4
23-13		D2313-9EA0-0000	OIL SEAL	1
23-14		D3615-FIA0-0000	DRUM COVER, REAR	1
23-15		D2315-FIA0-0000	OIL SEAL	1
23-16		I8557-06012	SCREW WASHER	6
23-17		D0114-9EA0-0000	SPACER	1
23-18		D3610-9FA0-1000	REAR BRAKE DRUM	1
23-19		D3611-5EA0-0000	GASKET, REAR DRUM COVER	1
23-20		D2316-5EA0-0000	DRAIN PIPE ASSY.	1
23-21		D2319-5EA0-0000	PLUG, PURGE HOLE	1
23-22		E3450-9FA0-0000	CABLE, REAR BRAKE	1
23-22-1		E3453-5EA0-0000	CIRCULAR CYLINDER	1
23-22-2		E3454-9FA0-0000	NUT,ADJUSTING	1
23-23		I0149-08030	FLANGE BOLT, HEX.	1
23-24		I5611-08200	NUT,FLANGE	1

24 HANDLER BAR

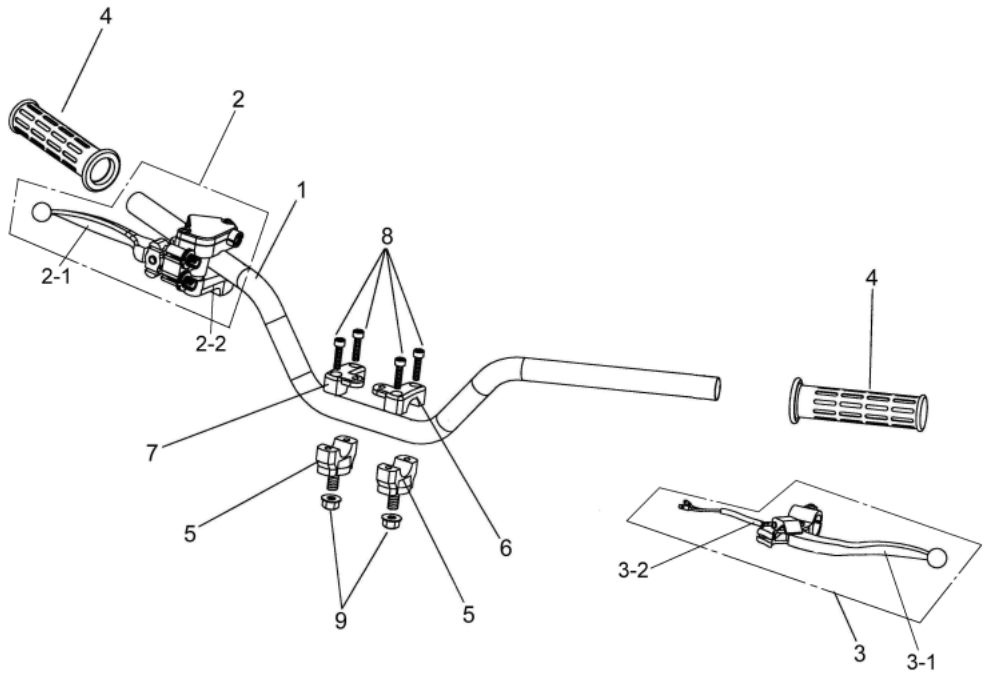

ITEM	AVAIL	PART NO.	NAME	QTY
24			HANDLE BAR	
24-1		E3100-9FA0-0000	HANDLE BAR ASSY.	1
24-2		E3180-9FA0-0010	LEVER ASSY., (RIGHT)	1
24-2-1		E3181-9FA0-0000	LEVEL,RIGHT	1
24-2-2		E319A-5EA0-0000	LEVEL ACCELERATE	1
24-3		E3170-5EB0-0010	LEVEL ASSY., LEFT	1
24-3-1		E3171-5EB0-0000	LEVEL,LEFT	1
24-3-2		E3174-5EA0-0000	BARKE SWITH ASSY.	1
24-4		E3166-5EA0-0000	GRIP	2
24-5		E3112-5EA0-0000	BOTTOM,HANDLE BAR CLAMP	2
24-6		E3110-5EA0-0000	CAP,HANDEL BAR CLAMP(L)	1
24-7		E3111-5EA0-0000	CAP,HANDEL BAR CLAMP(R)	1
24-8		I0050-06025	BOLT, SOCKET	4
24-9		I5611-10200	FLANGE NUT CHECK	2

25. BUMPER, FOOTRESR

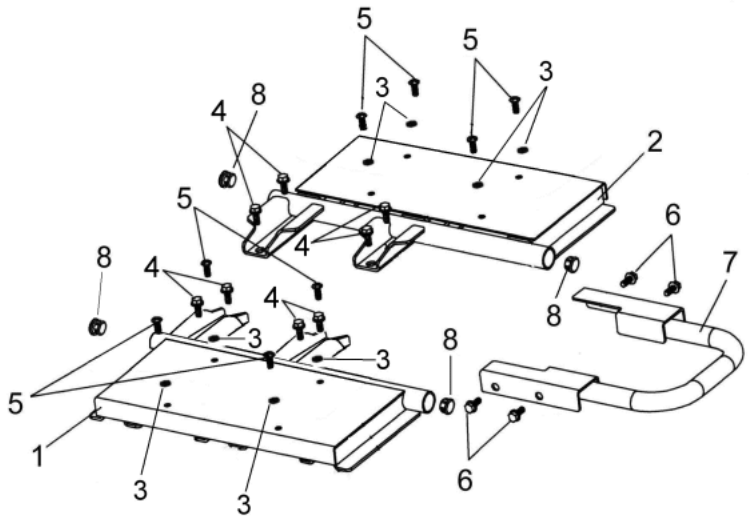

ITEM	AVAIL	PART NO.	NAME	QTY
25			BUMPERFOOTREST	
25-1		E0700-9FA0-0000	FOOTREST BAR,LEFT ASSY	1
25-2		E0706-9FA0-0000	FOOTREST BAR,RIGHT ASSY	1
25-3		C510C-FIA0-0000	RUBBER PAD	8
25-4		I0149-10020	BOLT,FLANGE	8
25-5		I8310-06020-01	SCREW, OVAL	8
25-6		I0149-08016	FLANGE BOLT, HEX.	4
25-7		E0410-9FA0-0000	REAR BAR ASSY.	1
25-8		E0707-9FA0-0000	PLUG, FOOTREST PLATE	4

26. CHAIN, REAR WHEEL AXLE

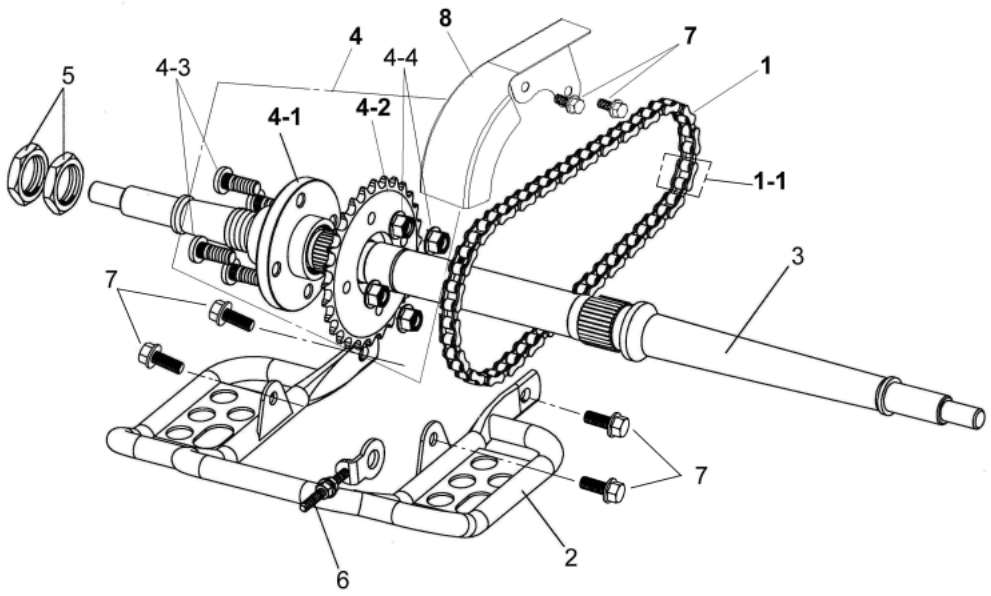

ITEM	AVAIL	PART NO.	NAME	QTY
26			CHAINREAR WHEEL AXLE	
26-1		D0100-9FA0-0000	DRIVE CHAIN ASSY. (#520,48)	1
26-1-1		D0104-9EA0-0000	DRIVE CHAIN LINK(#520)	1
26-2		D0101-9FA0-0000	PROTECT COVER	1
26-3		D2301-9EA0-0000	REAR AXLE	1
26-4		D0110-9EA0-0000	DRIVE CHAIN ASSY.(28T)	1
26-4-1		D0111-9EA0-0000	SPROCKET HOLDER, REAR	1
26-4-1		D0111-9EA0-0000	SPROCKET HOLDER, REAR	1
26-4-2		D1111-9EA0-0000	GEAR(28T)	1
26-4-2		D1111-9EA0-0000	GEAR(28T)	1
26-4-3		D2706-9EA0-0000	BOLT	4
26-4-3		D2706-9EA0-0000	BOLT	4
26-4-4		I5611-10200	FLANGE NUT CHECK	4
26-4-4		I5611-10200	FLANGE NUT CHECK	4
26-5		D2302-9EA0-0000	NUT, REAR WHEEL AXLE	2
26-6		D0120-FIA0-0001	CHAIN ADJUSTER COMP.	1
26-7		I0149-08016	FLANGE BOLT, HEX.	6
26-8		D0510-9FA0-0000	DRIVE CHAIN COVER	1

27 STEERING

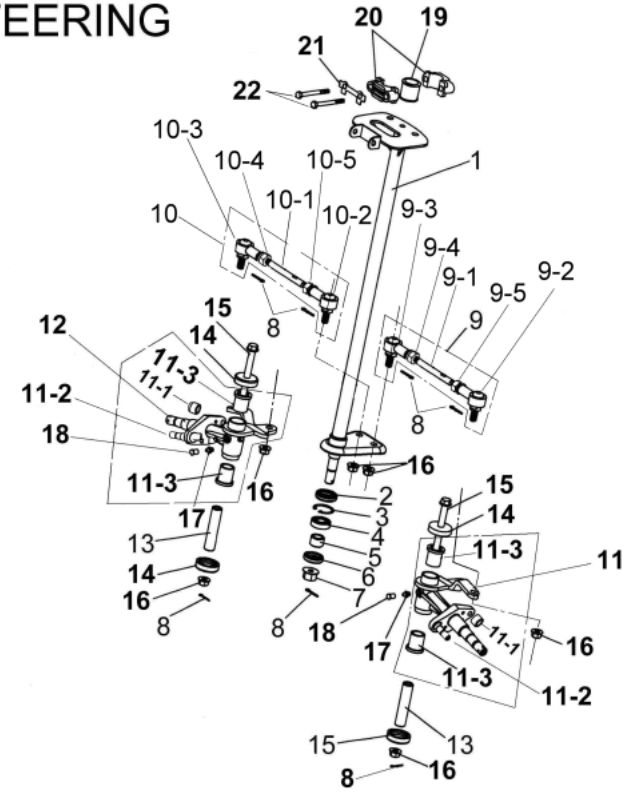

ITEM	AVAIL	PART NO.	NAME	QTY
27			STEERING	
27-1		E3200-9FA0-0000	SHAFT ASSY., STEERING	1
27-2		I3102-5AC0-0000	OIL SEAL	1
27-3		I4510-32000	C CLIP EX 32	1
27-4		I6100-6002ZZ	BEARING (6002ZZ)	1
27-5		D4620-5EA0-0000	INNER SPACER	1
27-6		E3201-5EA0-0000	OIL SEAL	1
27-7		I5611-14200	HEX. FLANGE NUT, SAFETY	1
27-8		I9900-25019	PIN, SPLIT	7
27-9		E0258-9FA0-0000	STEERING TIE-ROD ASSY., LEFT	1
27-9-1		E0251-9FA0-0000	BOLT,STUD	1
27-9-2		E0255-FIA0-0000	UNIVERSAL JOINT(L)	1
27-9-3		E0256-FIA0-0000	UNIVERSAL JOINT(R)	1
27-9-4		E0252-5EA0-0000	NUT (R)	1
27-9-5		E0253-5EA0-0000	NUT (L)	1
27-10		E0259-9FA0-0000	STEERING TIE-ROD ASSY., RIGHT	1
27-10-1		E0251-9FA0-0000	BOLT,STUD	1
27-10-2		E0255-FIA0-0000	UNIVERSAL JOINT(L)	1
27-10-3		E0256-FIA0-0000	UNIVERSAL JOINT(R)	1
27-10-4		E0252-5EA0-0000	NUT (R)	1
27-10-5		E0253-5EA0-0000	NUT (L)	1
27-11		E0205-9FA0-0000	KNUCKLE, LEFT ASSY	1
27-11-1		D5142-9FA0-0000	SLEEVE,FRONT BRAKE ARM CAM	2
27-11-2		D5144-9FA0-0000	FRONT BRAKE DRUM	2
27-11-3		E0206-9FA0-0000	OIL LINER(17)	4
27-12		E0215-9FA0-0000	KNUCKLE, RIGHT ASSY	1
27-13		E0211-9FA0-0000	SLEEVE	2
27-14		E0203-9FA0-0000	CAP	4
27-15		I5701-10105-0A	FLANGE BOLT, HEX.	2
27-16		I5611-10200	FLANGE NUT CHECK	6
27-17		I6600-06000	GREASE VALVE	2
27-18		E0209-5EA0-9000	CAP, GREASE VALVE	2
27-19		E3225-5EA0-0000	PU LINER	1
27-20		E3202-9FA0-0000	HOLDER, STEERING COLUMN	2
27-21		E3203-9FA0-0000	FIX PLATE, STEERING SHAFT	1
27-22		I0020-08055	BOLT(M8×55)	2

28 ELECTRICAL PARTS

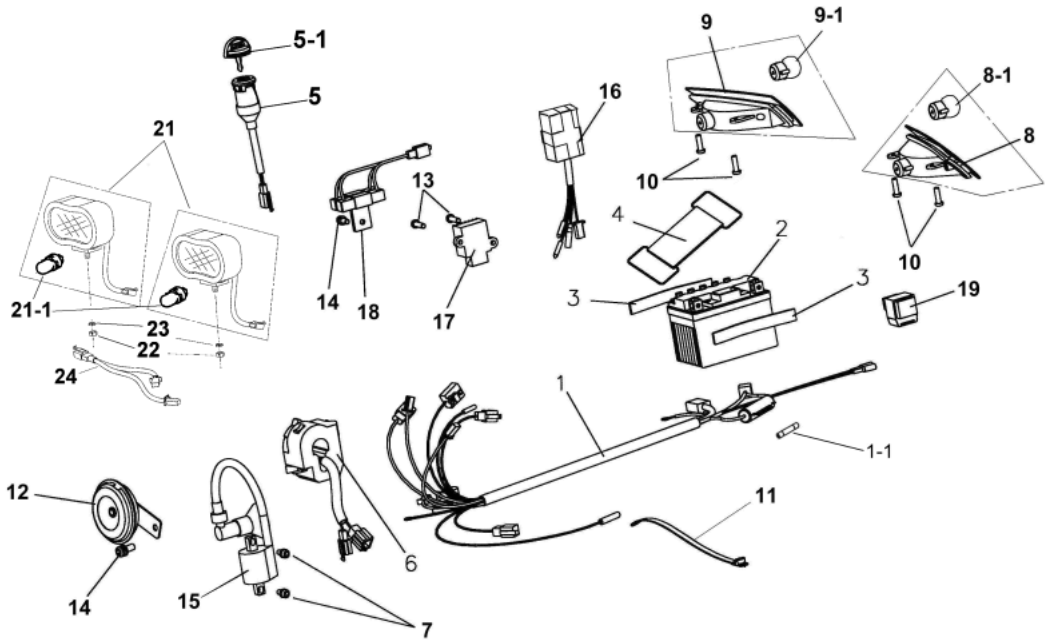

ITEM	AVAIL	PART NO.	NAME	QTY
28			ELECTRICAL EQUIPMENT	
28-1		C2100-9FA0-0000	MAIN WIRE ASSY.	1
28-1-1		C2010-5EA0-0000	FUSE(7A)	1
28-2		C1500-9FA0-0000	BATTERY	1
28-3		C1501-9FA0-0000	FOAM STICK, BATTERY	2
28-4		C1502-9FA0-0000	RUBBER CLAMP, BATTERY(89L)	1
28-5		C5010-9FA0-0000	MAIN SWITCH	1
28-5-1		C5013-9FA0-0000	MATERIAL KEY (RIGHT CUT)	1
28-5-1		C5013-9FA0-0000	MATERIAL KEY (RIGHT CUT)	1
28-5-2		C5018-9FA0-0000	MATERIAL KEY (LEFT CUT)	1
28-6		C5200-9FA0-0000	LEVER HOLDER ASSY., LEFT	1
28-7		I8556-06020	SCREW, PAN HEAD	2
28-8		C5031-9FA0-0000	TAIL LIGHT, LEFT	1
28-8-1		C5004-9FA0-0000	BULB(8w)	1
28-9		C5032-9FA0-0000	TAIL LIGHT, RIGHT	1
28-9-1		C5004-9FA0-0000	BULB(8w)	1
28-10		I7707-04016	TAPPING SCREW, TRUSS	4
28-11		H3936-5AA0-0000	WIRE CLAMP	1
28-12		C8110-5BA0-E000	HORN	1
28-13		I8506-05016	SCREW PAN	2
28-14		I8556-06012	SCREW PAN	2
28-15		C0510-B00-0000	IGNITION COIL ASSY.	1
28-16		C0410-B00-7000	C.D.I. UNIT ASSY.	1
28-17		C1600-B00-0000	RECTIFIER COMP REGULATE	1
28-18		C5400-B00-0000	RESISTOR ASSY	1
28-19		C5850-B00-0000	STARTER RELY ASSY.	1
28-21		C5030-FIB0-0000	HAED LIGHT	2
28-21-1		C5003-FIB0-0000	BULB,HEADLIGHT(12v 20w)	2
28-22		I5800-08300	NUT, HEX.	2
28-23		I9901-08100	SPRING WASHER	2
28-24		C5033-9FB0-0000	HEAD CAMP MAIN WIRE	1

29.FRONT&REAR PACK ASSY.

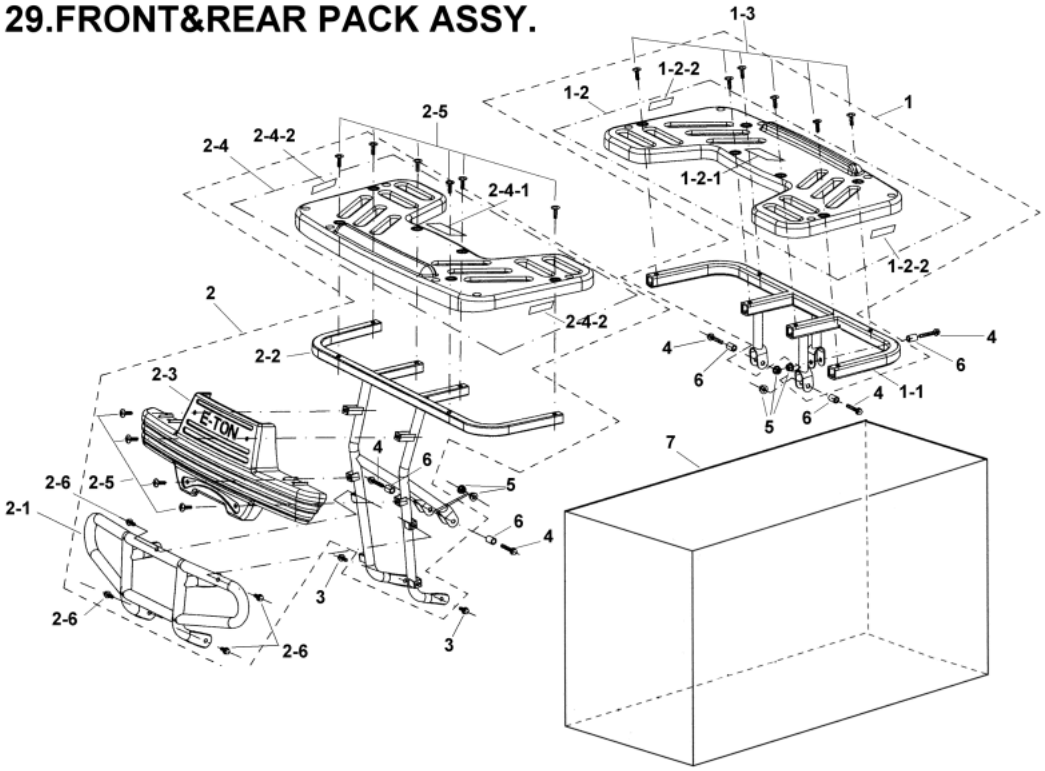

ITEM	AVAIL	PART NO.	NAME	QTY
29			FRONT&REAR PACK ASSY	
29-1		E041A-9FB0-0000	REAR RACK ASSY	1
29-1-1		E0411-9FB0-0000	REAR RACK	1
29-1-2		F4001-9FB0-0000	REAR CARRIER COVER	1
29-1-2-1		H7113-9FB0-0000	CARRIER COVER,STICKER	1
29-1-2-2		H7117-FIB0-0000	REAR REFLECTOR,STICKER	2
29-1-3		I0149-06823	SCREW	6
29-2		E041B-9FB0-0000	FRONT RACK ASSY.	1
29-2-1		E0400-9FB0-0000	BUMPER FRONT ASSY.	1
29-2-2		E0413-9FB0-0000	FRONT CARRIER	1
29-2-3		F3000-9FB0-0000	FRONT BUMPER COVER	1
29-2-4		F4000-9FB0-0000	FRONT CARRIER COVER	1
29-2-4-1		H7113-9FB0-0000	CARRIER COVER,STICKER	1
29-2-4-2		H7116-FIB0-0000	FRONT REFLECTOR,STICKER	2
29-2-5		I0149-06823	SCREW	10
29-2-6		I0149-08016	FLANGE BOLT, HEX.	4
29-3		I0149-08016	FLANGE BOLT, HEX.	2
29-4		I0149-08040	BOLT,FLANGE	5
29-5		I5611-08200	NUT,FLANGE	5
29-6		E0402-9FA0-0000	COLLAR,BUMPER	5
29-7		H9510-9FB0-0000	PACKING CASE	1

30.PACKING CASE,EXTERNAL

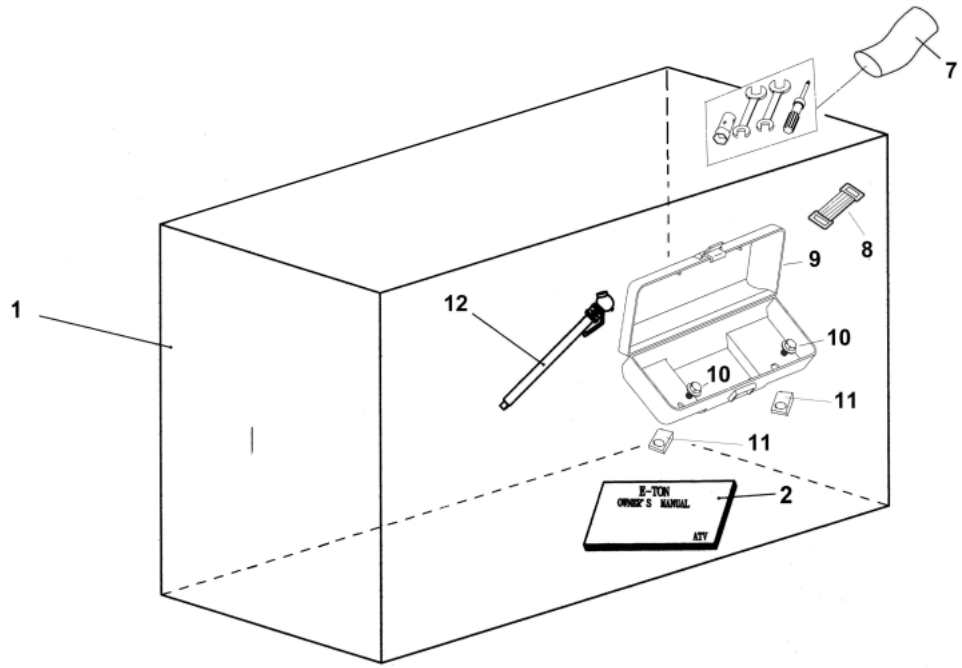

ITEM	AVAIL	PART NO.	NAME	QTY
30			PACKING CASEEXTERNAL	
30-1		H9500-9FA0-0000	PACKING CASE,EXTERNAL	1
30-2	N	H9900-9FA0-0000	OWNER'S MANUAL	1
30-7		H9020-9FA0-0000	TOOL SET	1
30-8		H9021-9FA0-0000	WIRE CLAMP	1
30-9		H9010-5EA0-0000	TOOL BOX	1
30-10		I0149-06016	BOLT FLANGE	2
30-11		I4071-06080	NUT, FLANGE CHECK(M6)	2
30-12		H9022-5EA0-0000	PRESSURE METER	1

No picture.

ITEM	AVAIL	PART NO.	NAME	QTY
40			CYLINDER+PISTON TOP END KIT	
40-1		A21AA-B00-0000	CYLINDER+PISTON TOP END KIT	1
40-1-1		A2100-B00-0000	CYLINDER	1
40-1-1		A2100-B00-0000	CYLINDER	1
40-1-2		A2191-B00-0000	GASKET CYLINDER	1
40-1-2		A2191-B00-0000	GASKET CYLINDER	1
40-1-3		A2251-B00-0000	GASKET CYLINDER HEAD	1
40-1-3		A2251-B00-0000	GASKET CYLINDER HEAD	1
40-1-4		A3011-B00-0000	PISTON RING SET (50)	1
40-1-4		A3011-B00-0000	PISTON RING SET (50)	1
40-1-5		A3101-B00-0000	PISTON	1
40-1-5		A3101-B00-0000	PISTON	1
40-1-6		A3111-B00-0000	PIN PISTON (12×40)	1
40-1-6		A3111-B00-0000	PIN PISTON (12×40)	1
40-1-7		I4601-12000	CLIP, PISTON PIN	2
40-1-7		I4601-12000	CLIP, PISTON PIN	2
40-1-8		I1100-1215165	BEARING, NEEDLE	1
40-1-8		I1100-1215165	BEARING, NEEDLE	1
40-1-9		A8291-5AA0-0000	GASKET (34×25.4×4)	1
40-1-9		A8291-5AA0-0000	GASKET (34×25.4×4)	1

No picture.

ITEM	AVAIL	PART NO.	NAME	QTY
41			MAINTENANCE KIT 1 (MJ # 85)	
41-01		A6100-B00-A001	MAINTENANCE KIT 1 (MJ # 85)	1
41-01-1		KAC30310	V CLIP	1
41-01-01		KAC30310	V CLIP	1
41-01-2		KAC30220	JET NEEDLE ASSY. (#3CR1)	1
41-01-02		KAC30220	JET NEEDLE ASSY. (#3CR1)	1
41-01-3		KAC30110	THROTTLE VALVE (#3.0)	1
41-01-03		KAC30110	THROTTLE VALVE (#3.0)	1
41-01-4		A6105-B00-0000	AIR FLOW ADJUSTING SCREW	1
41-01-04		A6105-B00-0000	AIR FLOW ADJUSTING SCREW	1
41-01-5		KAC30840	THROTTLE ADJUSTING SCREW	1
41-01-05		KAC30840	THROTTLE ADJUSTING SCREW	1
41-01-6		KAC30510	SLOW JET (*20)	1
41-01-06		KAC30510	SLOW JET (*20)	1
41-01-7		KAC30610	NEEDLE JET (*426 E-1)	1
41-01-07		KAC30610	NEEDLE JET (*426 E-1)	1
41-01-8		KAC30410	MAIN JET # 85	1
41-01-08		KAC30410	MAIN JET # 85	1
41-01-9		A6118-B00-0000	O-RING	1
41-01-09		A6118-B00-0000	O-RING	1
41-01-10		A6119-B00-0000	NEEDLE VALVE SEAT	1
41-01-10	N	A6119-B00-0000	NEEDLE VALVE SEAT	1
41-01-11		KAC31120	NEEDLE VALVE ASSY.	1
41-01-11	N	KAC31120	NEEDLE VALVE ASSY.	1
41-01-12		KAC30910	CHAMBER O-RING	1
41-01-12		KAC30910	CHAMBER O-RING	1

No picture.

ITEM	AVAIL	PART NO.	NAME	QTY
42			MAINTENANCE KIT 2 (MJ # 85)	
42-01		A6100-B00-A002	MAINTENANCE KIT 2 (MJ # 85)	1
42-01-1		KAC30310	V CLIP	1
42-01-01		KAC30310	V CLIP	1
42-01-2		KAC30220	JET NEEDLE ASSY. (#3CR1)	1
42-01-02		KAC30220	JET NEEDLE ASSY. (#3CR1)	1
42-01-3		KAC30110	THROTTLE VALVE (#3.0)	1
42-01-03		KAC30110	THROTTLE VALVE (#3.0)	1
42-01-4		A6105-B00-0000	AIR FLOW ADJUSTING SCREW	1
42-01-04		A6105-B00-0000	AIR FLOW ADJUSTING SCREW	1
42-01-5		KAC30840	THROTTLE ADJUSTING SCREW	1
42-01-05		KAC30840	THROTTLE ADJUSTING SCREW	1
42-01-6		KAC30510	SLOW JET (*20)	1
42-01-06		KAC30510	SLOW JET (*20)	1
42-01-7		KAC30610	NEEDLE JET (*426 E-1)	1
42-01-07		KAC30610	NEEDLE JET (*426 E-1)	1
42-01-8		KAC30410	MAIN JET # 85	1
42-01-08		KAC30410	MAIN JET # 85	1
42-01-9		A6118-B00-0000	O-RING	1
42-01-09		A6118-B00-0000	O-RING	1
42-01-10		A6119-B00-0000	NEEDLE VALVE SEAT	1
42-01-10	N	A6119-B00-0000	NEEDLE VALVE SEAT	1
42-01-11		KAC31120	NEEDLE VALVE ASSY.	1
42-01-11	N	KAC31120	NEEDLE VALVE ASSY.	1
42-01-12		KAC30910	CHAMBER O-RING	1
42-01-12		KAC30910	CHAMBER O-RING	1
42-01-13		KAC31210	FLOAT ASSY	1
42-01-13		KAC31210	FLOAT ASSY	1
42-01-14		KAC31410	DRAIN SCREW	1
42-01-14		KAC31410	DRAIN SCREW	1